SCHEMAT MOCOWANIA

FORMAT PAPIERU A3, SKALA 1:1

Emerson Polska Sp. z o.o. Sp. k.
ul. Belzacka 176/178, 97-300 Piotrków Tryb.
www.nexxt.com.pl

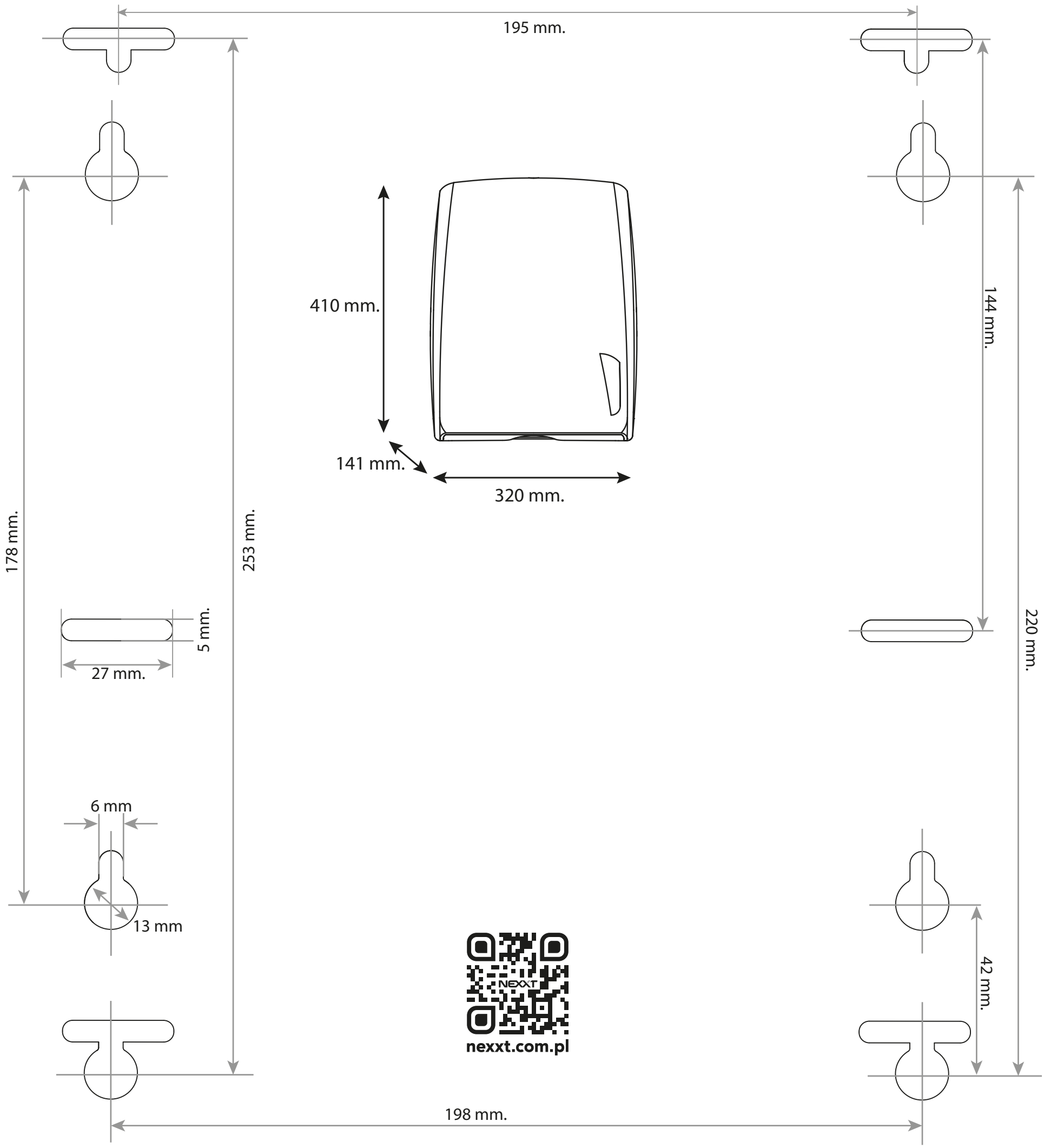

nexxt.com.pl

DOZOWNIKI: NHT41DPW, NHT41DPB, NHT41DPG, NHT41DPS